MAX. MOTOR	No.270 V	No.270 W	No.270 X	No.310 V	No.310 W	No.310 X	No.340 V	No.340 W	No.340 X	Y
D180				381	573	976	381	588	991	135
D132				301	493	816	301	508	831	110
D90	177	285	477	236	428	686	236	443	701	110

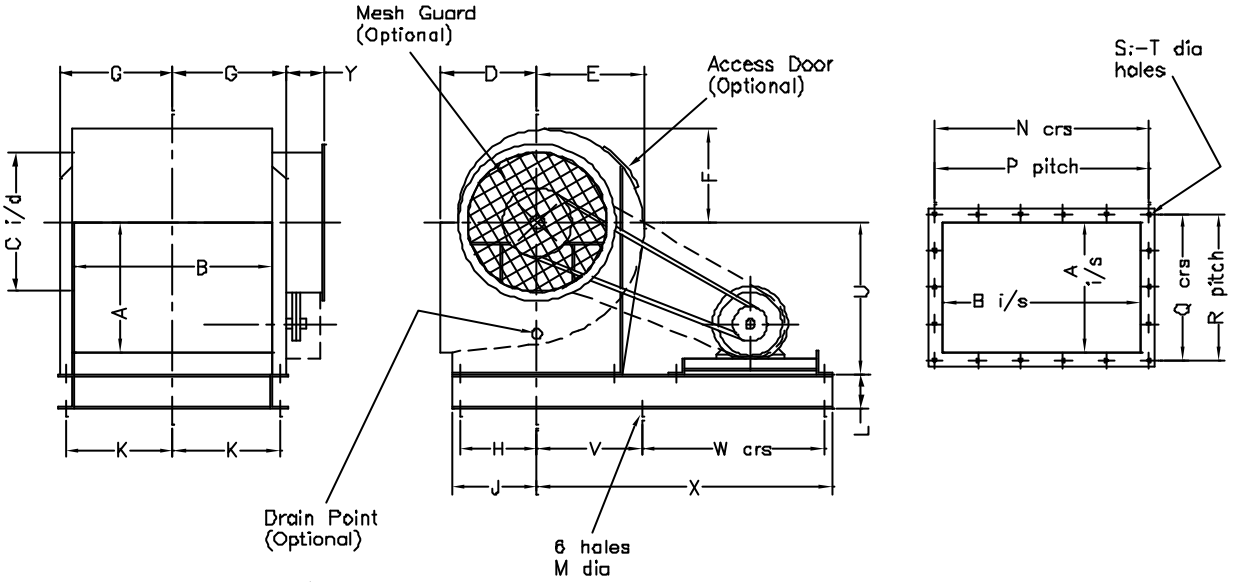

Optional Items Are Supplied (If Requested) At An Extra Cost

30mm Flange On Fan No.270
40mm Flange On Fan No.310 & 340

	GENERAL DIMENSIONS												OUTLET						'U' CENTRE HEIGHT		
FAN SIZE	A	B	C	D	E	F	G	H	J	K	L	M	N	P	Q	R	S	T	0°-45°	90°-135°	180°-225°
270	260	400	267	203	216	188	232	108	123	219	75	14	437	4	297	3	14	10	318	267	241
310	298	458	305	229	250	222	271	192	214	254	100	14	506	4	346	3	14	10	356	279	254
340	337	514	349	254	280	245	299	207	229	282	100	14	565	4	385	3	14	10	394	318	279

FAN ENGINEERING (midlands) LTD
19 Sandy Way, Amington Ind. Estate, Tamworth B77 4EX
tel: 01827 57000, fax: 01827 64641, e-mail: fanengin@aol.com

3rd ANGLE

TITLE:- No.270-340 MULTIVANE ARG.4/ DIDW FANS

QUOTE REF:-

DATE:-

CHART No:- C10095-A1