MAX. MOTOR	No.460 V	No.460 W	No.460 X	No.560 V	No.560 W	No.560 X	No.620 V	No.620 W	No.620 X	No.680 V	No.680 W	No.680 X	Y
D132	302	578	902	302	628	952	300	658	980	300	688	1010	135
D180	377	653	1052	377	703	1102	380	738	1140	380	768	1170	160
D225										465	853	1340	185

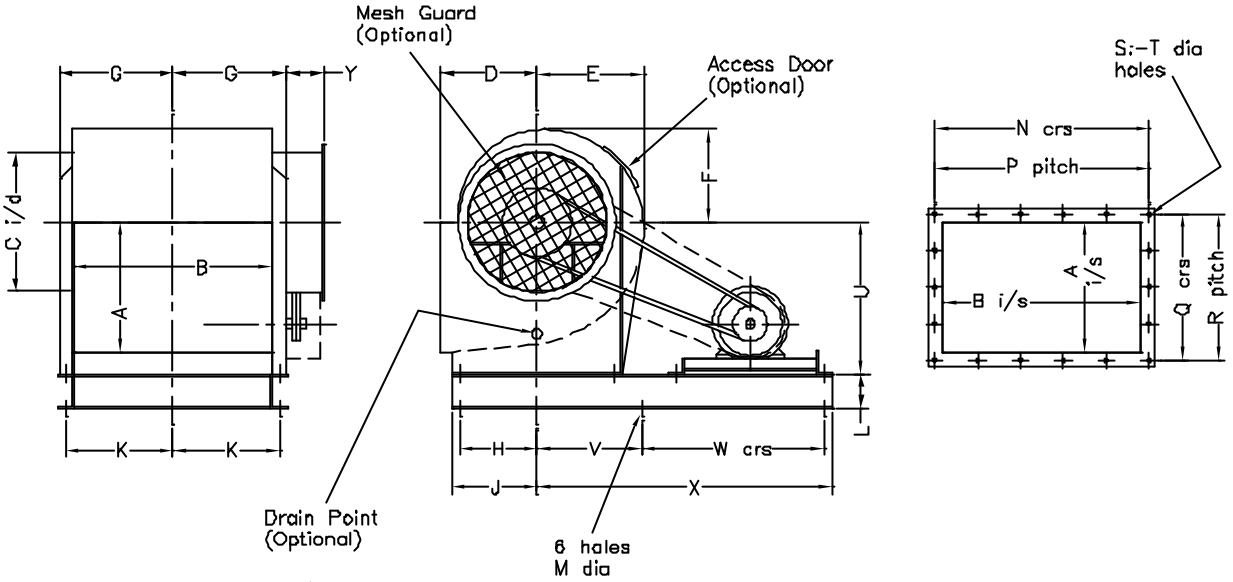

Optional Items Are Supplied (If Requested) At An Extra Cost

40mm Flange On Fan No.460 Up To & Including No.680

	GENERAL DIMENSIONS												OUTLET						'U' CENTRE HEIGHT		
FAN SIZE	A	B	C	D	E	F	G	H	J	K	L	M	N	P	Q	R	S	T	0°-45°	90°-135°	180°-225°
460	451	686	476	324	375	324	385	276	298	368	100	16	734	5	499	4	18	10	508	419	356
560	521	800	552	368	432	375	442	326	348	425	100	16	848	6	569	4	20	10	597	483	419
620	597	914	629	416	495	432	509	358	380	487	100	16	962	6	645	4	20	10	680	521	427
680	673	1026	705	467	546	482	565	388	410	543	100	16	1074	7	721	5	24	10	736	584	508

FAN ENGINEERING (midlands) LTD
19 Sandy Way, Amington Ind. Estate, Tamworth B77 4EX
tel: 01827 57000, fax: 01827 64641, e-mail: fanengin@aol.com

3rd ANGLE

TITLE:- No.460-680 MULTIVANE ARG.4/ DIDW FANS

QUOTE REF:-

DATE:-

CHART No:- C10096-A