MAX. MOTOR	No.750 V	No.750 W	No.750 X	No.830 V	No.830 W	No.830 X	No.920 V	No.920 W	No.920 X	No.990 V	No.990 W	No.990 X	Y
D132	304	728	1054	305	793	1120	305	838	1165	305	873	1200	135
D180	379	803	1204	380	868	1270	380	913	1315	380	948	1350	160
D225	469	893	1384	465	953	1440	470	1003	1495	470	1038	1530	185
D280										560	1128	1710	210

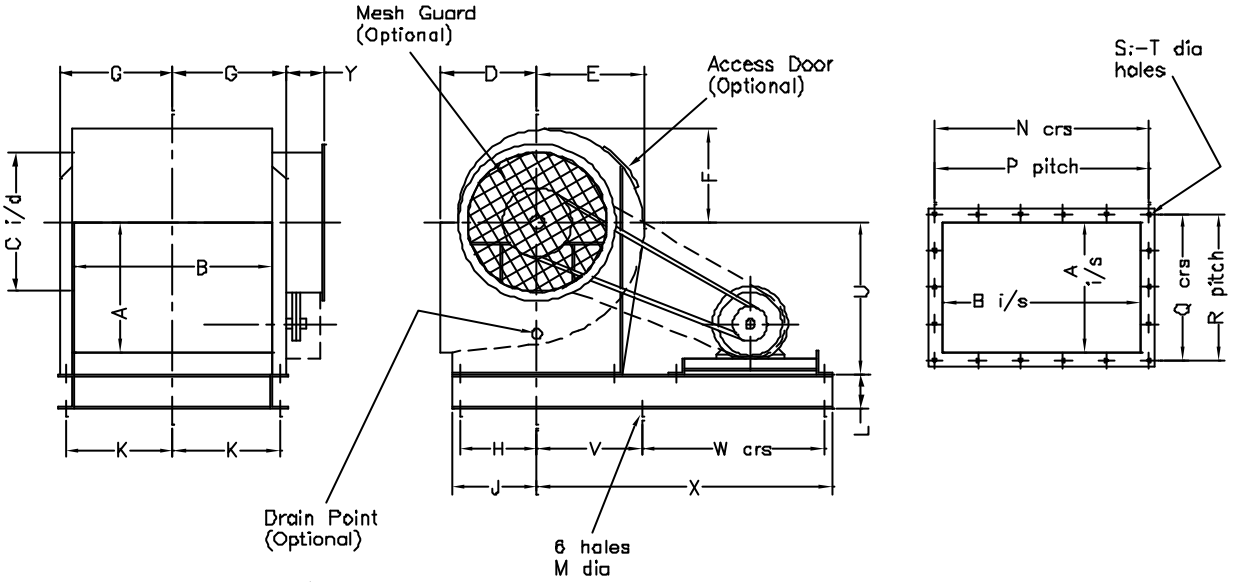

Optional Items Are Supplied (If Requested) At An Extra Cost

50mm Flange On Fan No.750 Up To & Including No.990

	GENERAL DIMENSIONS												OUTLET						'U' CENTRE HEIGHT		
FAN SIZE	A	B	C	D	E	F	G	H	J	K	L	M	N	P	Q	R	S	T	0°-45°	90°-135°	180°-225°
750	749	1144	787	511	607	549	625	424	446	603	100	19	1206	7	811	5	24	10	813	660	559
830	826	1258	864	556	686	597	682	488	510	660	100	19	1320	8	888	6	28	10	889	711	610
920	902	1372	940	610	749	648	739	533	555	717	100	19	1434	9	964	6	30	10	965	762	660
990	978	1486	1016	660	800	699	796	568	590	774	100	19	1544	10	1040	7	34	10	1041	838	711

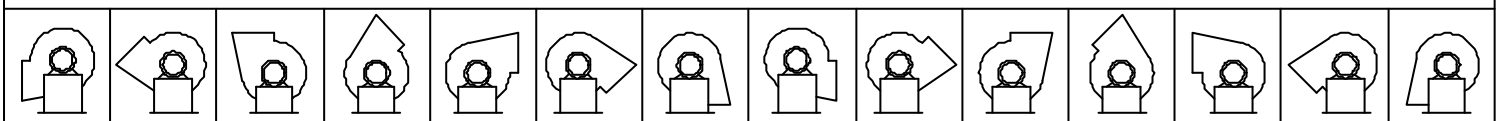

FAN ENGINEERING (midlands) LTD
19 Sandy Way, Amington Ind. Estate, Tamworth B77 4EX
tel: 01827 57000, fax: 01827 64641, e-mail: fanengin@aol.com

3rd ANGLE

TITLE:- No.750-990 MULTIVANE ARG.4/ DIDW FANS

QUOTE REF:-

DATE:-

CHART No:- C10097-A