MAX. MOTOR	No.1060 V	No.1060 W	No.1060 X	No.1140 V	No.1140 W	No.1140 X	No.1220 V	No.1220 W	No.1220 X	No.1370 V	No.1370 W	No.1370 X	Y
D180	380	977	1390	380	1017	1430	380	1057	1470	380	1137	1550	160
D225	470	1067	1570	470	1107	1610	470	1147	1650	470	1227	1730	185
D280	560	1157	1750	560	1197	1790	560	1237	1830	560	1317	1910	210
D315										710	1467	2210	210

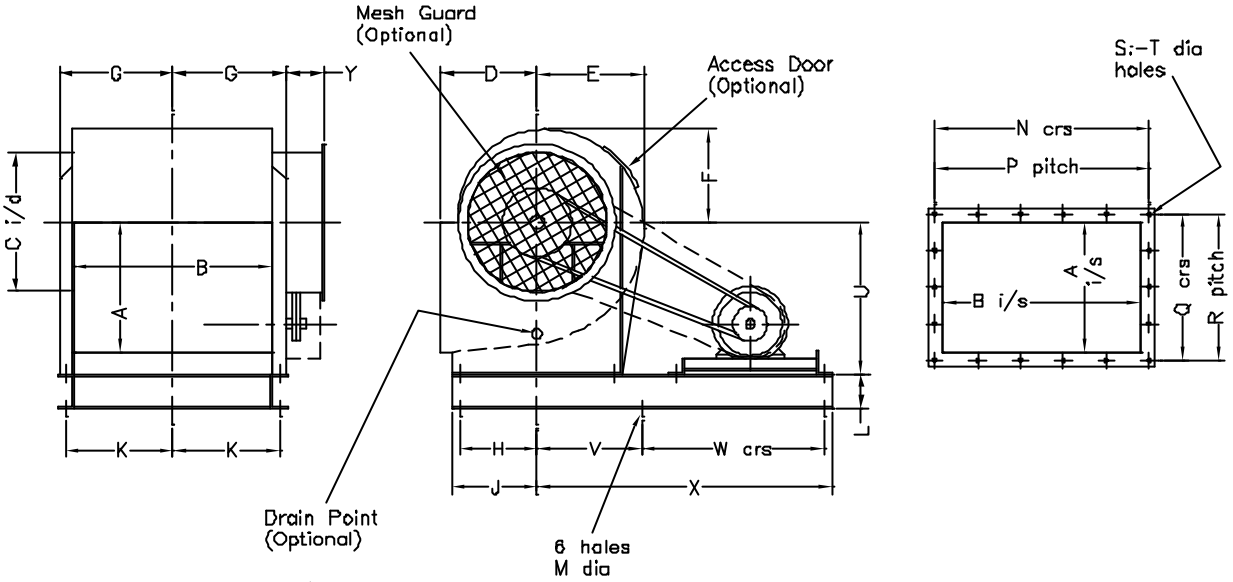

Optional Items Are Supplied (If Requested) At An Extra Cost

50mm Flange On Fan No.1060 Up To & Including No.1370

	GENERAL DIMENSIONS												OUTLET						'U' CENTRE HEIGHT		
FAN SIZE	A	B	C	D	E	F	G	H	J	K	L	M	N	P	Q	R	S	T	0°-45°	90°-135°	180°-225°
1060	1054	1600	1105	737	864	762	878	597	630	845	150	22	1662	11	1116	7	36	10	1118	914	762
1140	1130	1714	1180	787	927	810	935	637	670	902	150	22	1776	11	1192	8	38	10	1230	970	850
1220	1194	1828	1260	831	990	864	992	677	710	959	150	22	1890	12	1256	8	40	10	1300	1030	900
1370	1346	2056	1410	933	1120	970	1106	757	790	1073	150	22	2118	13	1408	9	44	10	1450	1150	1010

FAN ENGINEERING (midlands) LTD
19 Sandy Way, Amington Ind. Estate, Tamworth B77 4EX
tel: 01827 57000, Fax: 01827 64641, e-mail: faneng@aol.com

3rd ANGLE

TITLE:- No.1060-1370 MULTIVANE ARG.4/ DIDW FANS

QUOTE REF:-

DATE:-

CHART No:- C10098-A